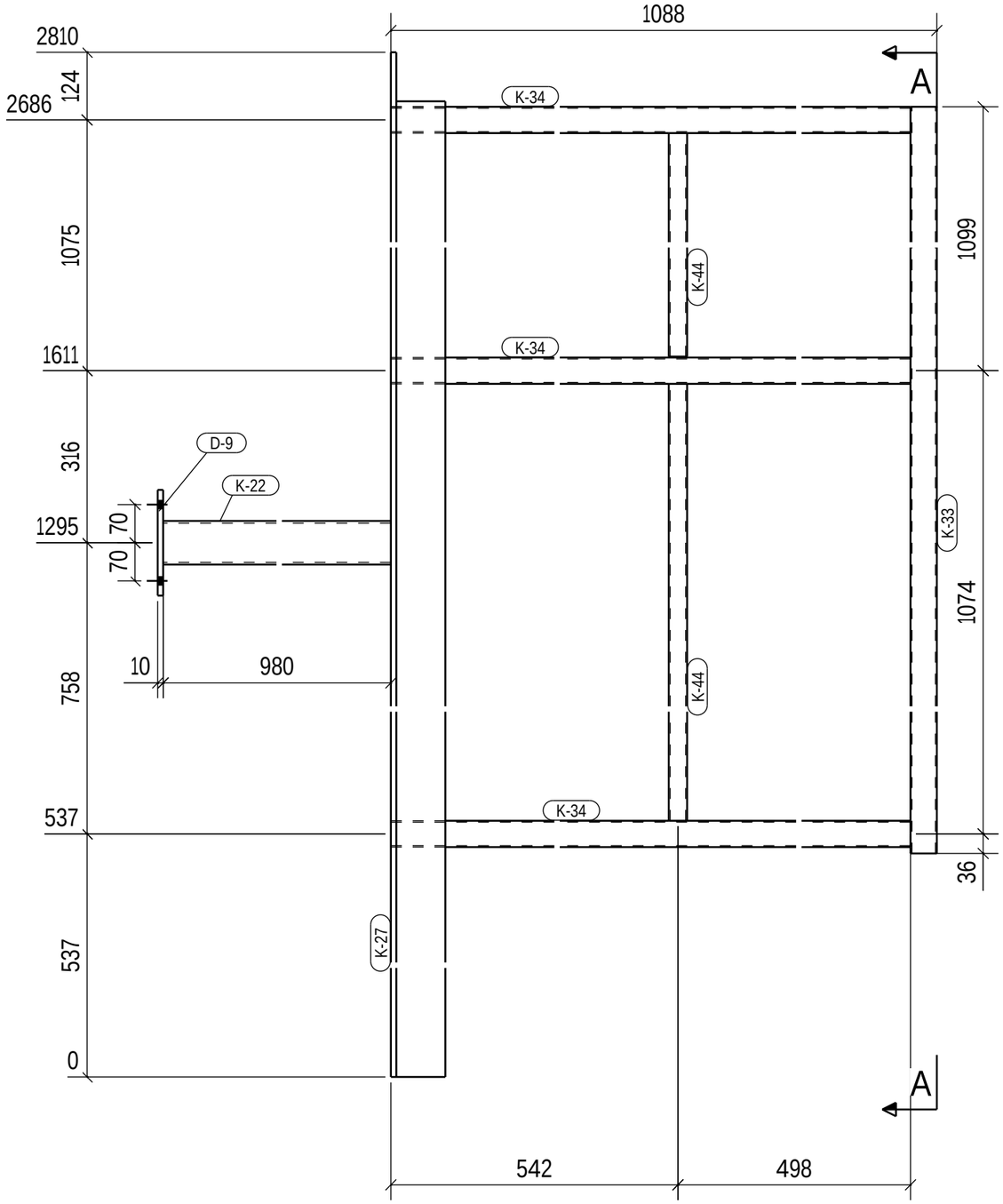

A - A
1:10

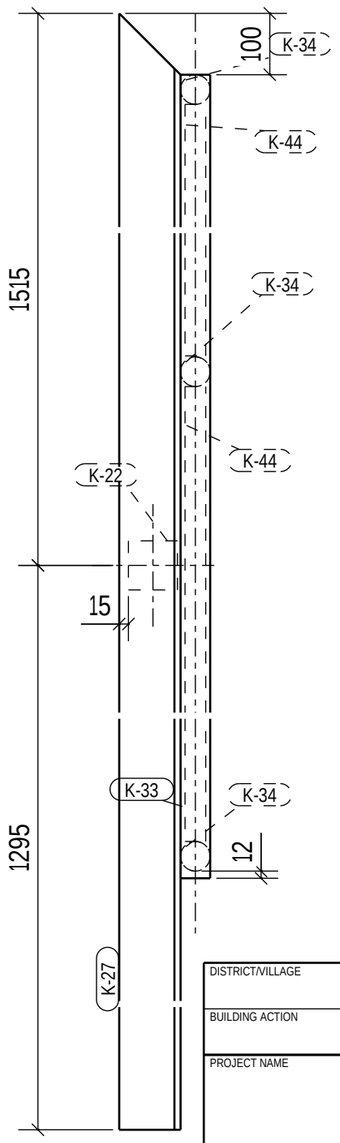

STEEL STRUCTURE CLASS	SURFACE HANDLING	WELDS, IF NOT SPECIFIED OTHERWISE
MANUFACTURING TOLERANCES 1(EN-1090-2)	COLOR TONE 1 / COLOR TONE 2 SYREFAST	WELD CLASS EXC 2

PART LIST FOR ASSEMBLY

P-46 STÅLSØYLE SYREFAST 2810*148*2078 FOR MANUFACTURING 1 pcs 74 kg

Pos	Profile - Type	Size	Material	pcs	kg / pcs	dwg-No
K-22	CFRHS80X80X4	980	AISI316	1	9.2	FREVAR SYFA
D-9	PL10	74*194	AISI316	1	1.1	FREVAR SYFA
K-27	L100*10	2810	AISI316	1	43.2	FREVAR SYFA
K-33	CFCHS48.3X2.6	2209	AISI316	1	6.6	FREVAR SYFA
K-34	CFCHS48.3X2.6	1040	AISI316	3	3.1	FREVAR SYFA
K-44	CFCHS33.7X2.6	1025	AISI316	2	2.1	FREVAR SYFA

DISTRICT/VILLAGE	BLOCK/ESTATE	BUILDING LOT	AUTHORIZATION NOTES	RATU
BUILDING ACTION			DRAWING CATEGORY	ARCHIVING CODE
PROJECT NAME			DRAWING CONTENT ASSEMBLY DRAWING P-46, STÅLSØYLE SYREFAST	SCALE 1:10
DESIGNER		DATE	CHECKER / ACCEPTOR	
			DESIGN FIELD: STR PROJECT NUMBER DWG. NO.: FREVAR SYFA	REVISION PAGE: P-46

Proj.nr.	Ritn.nr - JP	Ritad	Godkänd	Datum	Dok.typ	Avd.kod
	FREVAR SYFA				K	

AFRY

ASSEMBLY DRAWING
P-46, STÅLSØYLE SYREFAST

Ritad	Granskad	Godkänd
Datum --	Projekt	Skala 1:10

Format / Ritn.nr	Sida / Av	Rev
A3.	/	

Plats.nr

Grupp.nr
-

© PÖYRY FINLAND OY - USE AND REPRODUCTION ONLY BY OWNERS PERMISSION